CHAPTER XIV

SPECIFIC MEDICAL THERAPY

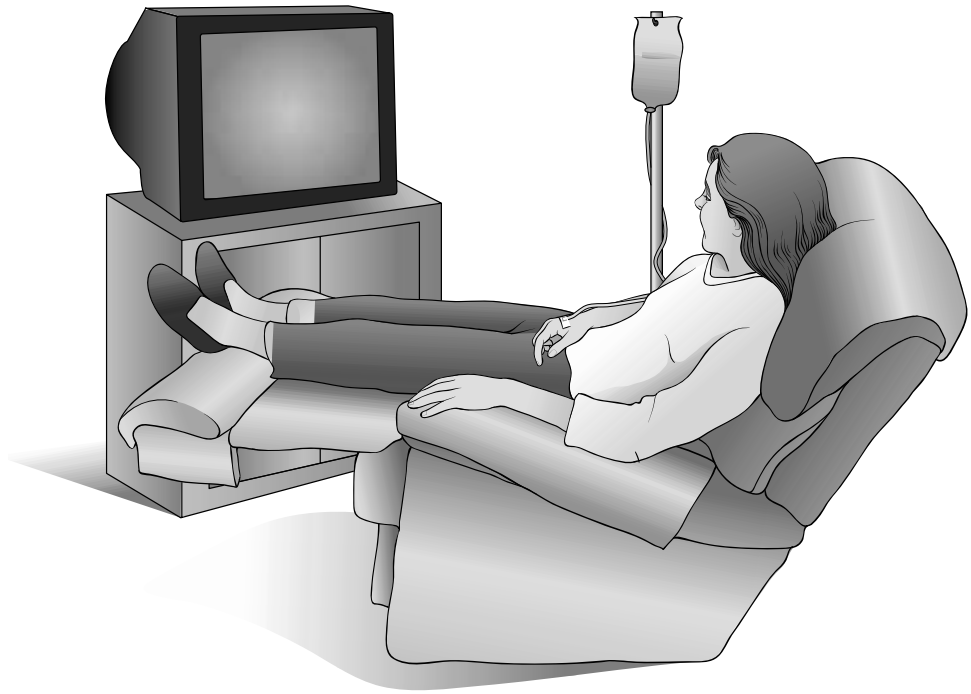

There are a number of specific medical therapies available to patients with primary immune deficiency diseases. They have made the effective therapy of these disorders a reality for most patients, improving their quality of life and allowing them to become productive members of society.

SPECIFIC MEDICAL THERAPY

INTRODUCTION: There are a number of specific medical therapies available to patients with primary immunodeficiency diseases. They have made the effective therapy of these disorders a reality for most patients, improving their quality of life and allowing them to become productive members of society. Four established therapies (gamma globulin replacement, bone marrow transplantation, gamma interferon therapy and treatment with adenosine deaminase) and a new experimental therapy (gene therapy) will be considered in this chapter. Their specific indications and the disorders for which they may be of benefit should be discussed with your physician.

GAMMA GLOBULIN THERAPY

The term, gamma globulin, refers to the fraction of blood plasma that contains immunoglobulins or antibodies. Individuals who are unable to produce adequate amounts of immunoglobulins or antibodies, such as patients with X-Linked Agammaglobulinemia, Common Variable Immunodeficiency, or other forms of hypogammaglobulinemia, may benefit from replacement therapy with gamma globulin. The gamma globulin temporarily replaces the missing antibodies and prevents infections. Unfortunately, approximately 1/2 of the infused gamma globulin containing the antibodies is eliminated over 3 to 4 weeks, so that patients must be infused every few weeks in order to maintain adequate levels.

As explained in other chapters of this handbook (see chapter on the Normal Immune System), mature B-lymphocytes (plasma cells), manufacture antibodies and release these molecules into the bloodstream when encountering antigens such as bacteria or viruses. There are literally millions of different antibodies in every normal person, but because there are so many different germs, no one person has made antibodies to every germ. The best way to ensure that the gamma globulin will contain a wide variety of antibodies is to pool blood from many individuals.

To commercially prepare gamma globulin that can be given to immunodeficient patients, the gamma globulin must first be purified (extracted) from the blood plasma of normal healthy individuals. Each donor must be acceptable as a blood donor according to the strict rules enforced by the American Association of Blood Banks. Donors are screened for travel or behavior that might increase the risk of acquiring an infectious disease. Then, the blood from each donor is carefully tested for evidence of transmissible diseases, such as AIDS or hepatitis, and any sample that is even suspected of having one of those diseases is discarded. Blood is collected from as many as 60,000 people, and then pooled together.

The first step in gamma globulin production is to spin the blood to remove all red and white blood cells. Then, the gamma globulins are chemically purified from the liquid plasma in a series of steps involving treatment with alcohol. This process results in the purification of antibodies of the immunoglobulin G (IgG) class, but only trace amounts of IgA and IgM remain in the final fraction (see chap-

ter on the Normal Immune System). The purification process removes other blood proteins and is also very effective at killing viruses and other germs that may be in the blood.

From the first use of gamma globulin in 1952 to the early 1980's, the only form that was available for use had to be given directly into the muscle (intramuscular, IM). Gamma globulin products for intramuscular injection continue to be used to give normal individuals a boost of antibodies after exposure to some specific diseases such as measles or hepatitis. The amount of gamma globulin needed to prevent these diseases is small, only about 5 ml (1 tsp.). Unfortunately, immunodeficient patients require frequent injections with much larger doses of gamma globulin than those used in normal individuals. These intramuscular injections were very painful, and only modest amounts of gamma globulin could be given in this way. There simply wasn't enough room inside the muscle for more.

In the early 1980's, new manufacturing processes were developed to make gamma globulin products that could be injected intravenously, or directly into the vein. There are now many different gamma globulin preparations licensed in the U.S. for intravenous use. For the most part, the products are equivalent. But, there are some minor differences, which may make one particular preparation more suitable for a given individual. Your doctor is your best source of information about which product is best for you.

Another alternative to injecting gamma globulin into the muscle or into the vein is to infuse it slowly, directly under the skin. This is known as subcutaneous infusion and is done with a small pump that can be worn on the belt. It is an alternative for those patients who have difficulty getting venous access and for some who have adverse reactions to intravenous gammaglobulin. Typically, infusions are given once or twice a week and result in blood levels of gammaglobulin that are as high as if it were given intravenously.

Purified gamma globulin has been used for nearly 50 years and has an excellent safety record. There never has been a case or AIDS due to the use of gamma globulin. However, in 1993 there was an outbreak of hepatitis C associated with one of the gamma globulin preparations. Since that time, all gamma globulin preparations are treated with additional methods to specifically kill viruses such as the AIDS virus and the hepatitis viruses. Some manufacturers treat the gamma globulin with solvent and detergent to break up the viruses. Others pasteurize with heat to kill them. Both methods have been shown by FDA tests to destroy all AIDS and hepatitis viruses.

Patients usually tolerate the new intravenous gamma globulin products very well. They can be administered either in an outpatient clinic or in the patient's own home. A typical infusion will take two to four hours from start to finish. Use of intravenous products allows physicians to give larger doses of gamma globulin than could be given intramuscularly. In fact, doses can be given that are large enough to raise the immunoglobulin levels in the patient's serum to normal, even just before the next infusion when the level would be lowest.

Most patients have no side effects from the IV infusions, but sometimes low-grade fever or headaches occur. These symptoms can usually be alleviated or eliminated by infusing the gamma globulin at a slower rate and/or giving

tylenol an hour or so before infusion. Less often patients experience hives or wheezing. These symptoms usually respond to antihistamines such as diphenhydramine (Benadryl). Headaches may occasionally be severe, especially in patients with a history of migraine headaches. These headaches may occur during the infusion or as long as three to five days later. Some patients with the more severe and persistent headaches have been found to have an increase in the number of white blood cells in the cerebral spinal fluid, which is the fluid that surrounds the brain. This is known as aseptic meningitis. The cause of this inflammation is not known, but it is not an infection and patients have not had permanent injury. It is bothersome, however, and usually requires treatment. In some patients merely changing brands of IVIG will eliminate the problem. Often it is necessary to treat with a steroid, before, during, or after the infusion. You should notify your doctor if you experience headaches that do not respond to standard medications such as Motrin or Tylenol.

The dose of gamma globulin varies from patient to patient. In part, the dose is determined by the patient's weight. It is also determined by measuring the blood level of IgG in the patient at some interval after infusion, and by determining how well a given dose of gamma globulin treats or prevents symptoms in an individual patient. Intravenous infusions of gamma globulin are usually given every three to four weeks, but they may be given more or less frequently depending on the needs of the individual patient.

It is important to remember that although our current gamma globulin products are very good, they do not duplicate exactly what nature normally provides. The manufactured gamma globulin is almost pure IgG, so essentially no IgA or IgM is transferred to the patient. The specific protective functions of these immunoglobulins are therefore not replaced. The IgA on the mucosal surfaces of the respiratory tract is not being replaced, which may be part of the reason that antibody deficient patients remain somewhat more susceptible to respiratory infections, even though they are receiving gamma globulin in an amount sufficient to maintain normal blood levels of IgG.

STEM CELL TRANSPLANTATION

Transplantation of stem cells from a normal donor to an immunodeficient recipient is a highly specialized procedure than can be used to treat some primary immunodeficiency diseases. Traditionally, stem cells were obtained from bone marrow, but now peripheral blood and blood obtained from the placenta at birth (cord blood) are excellent alternatives. The primary immunodeficiency diseases for which bone marrow transplantation is most commonly performed include those diseases that are characterized by deficient T-lymphocytes or combined deficiencies of T-lymphocytes and B-lymphocytes. Bone marrow transplantation is most often used to treat Severe Combined Immunodeficiency (SCID). Bone marrow transplantation has also been used in some patients to treat other primary immunodeficiency diseases such as the Wiskott-Aldrich syndrome, X-linked Hyper-IgM Syndrome, and Chronic Granulomatous Disease.

As mentioned in the chapter on the Normal Immune System, the bone mar-

row is the organ in which the immature cells of the immune system, the stem cells, arise and begin their developmental journey on the road to mature T-lymphocytes, B-lymphocytes, or neutrophils. These immature cells spill out of the marrow into the blood of the developing fetus, so that fetal blood and umbilical cord blood are also a rich source of stem cells.

The transplantation of bone marrow from a normal individual to an immunodeficient individual has the potential to replace the deficient immune system of the patient with a normal immune system. However, there are two problems in performing a bone marrow or stem cell transplant.

The first problem is the fact that except for the children with the most complete form of Severe Combined Immune Deficiency, all patients (the recipient, or host) will have enough immune function remaining to cause them to recognize the transplanted marrow as foreign, react against it and reject it. This first problem is called graft rejection. Thus, most patients must be treated with chemotherapy and/or radiation therapy in order to prevent them from rejecting the transplanted marrow. Although the chemotherapy and/or radiation therapy prevents the patient (recipient) from rejecting the transplanted marrow, it may cause serious side effects. These include loss of all of the cells of the bone marrow, including the red cells that carry oxygen, the white cells that help fight infection, and the platelets that help the blood clot. In fact, there is a very high risk of contracting a serious infection during the weeks immediately after a transplant. The chemotherapy also may cause severe blistering of the mouth or other mucus membranes that makes eating and drinking impossible. It is because of these serious complications that transplantation is reserved for those patients with the most severe immune defects.

The second problem is the fact that the transplanted bone marrow (or graft) carries the immune system of the donor and may therefore recognize the patient (or recipient or host) as foreign, react against the patient and attack the patient. This second problem is called graft vs. host disease (GvHD).

In order to overcome the dual problems of graft rejection by the host and, more importantly, graft versus host disease, whenever possible, "matched" bone marrow (see paragraph immediately below) is transplanted. Alternatively, the marrow can be treated to remove most of the T-lymphocytes capable of causing GvHD, although that delays the development of the new immune system.

SELECTION OF THE DONOR: A matched marrow is one that is from a donor whose tissue type (or transplantation antigens) is very similar or identical to the recipient. These transplantation antigens are called histocompatibility antigens because they determine whether the transplanted tissue is "compatible". Each of us has a collection of these histocompatibility antigens on most of our cells including the cells of our immune system and our bone marrow cells. The characteristics of these histocompatibility antigens are determined by a series of genes clustered on one pair of our chromosomes known as the sixth (6th) human chromosomes. Because the genes for histocompatibility antigens are closely clustered on the chromosome they are inherited as a single unit called a haplotype. There are so many different forms of these histocompatibility antigens that a person's haplotype (or collection of these genes) is relatively unique.

However, because people who are closely related (like brothers and sisters) share some genes they may sometimes share their combinations of genes (their haplotypes) which determine their histocompatibility antigens.

As mentioned in the preceding paragraph, each person's histocompatibility genes are clustered on a single pair of chromosomes and can be divided into four closely linked major groups designated HLAA, HLAB, HLAC and HLAD. The diagram below shows how they are clustered on the 6th chromosome and how parents would pass them on to their children. Like any other genetic characteristic, the genes that determine our tissue type (or transplantation antigens) are passed on in a random fashion.

There are a number of important points relating to Figure 1:

1. Each of the transplantation antigens is arbitrarily numbered 1 through 16. Each group of 4 antigens on each of the chromosomes is called a haplotype and is inherited as a single unit. These haplotypes have been arbitrarily designated W, X, Y and Z in Figure 1.
2. As with any other genetic characteristic the parents pass on only one chromosome and thus only one set of transplantation genes (haplotype) to each child.
3. Each child receives one set of transplantation genes (or one haplotype) from each parent.
4. There are only four possible combinations of haplotypes in the children. Each of the four combinations is represented in Figure 1.
5. In the usual situation, a brother or sister of the immunodeficient patient is selected as the donor. Each sibling has a 25% chance of having the same transplantation genes as the immunodeficient patient, and therefore being a suitable match, since there are only 4 possible combinations of genes.

FIGURE 1 **SELECTION OF THE DONOR**

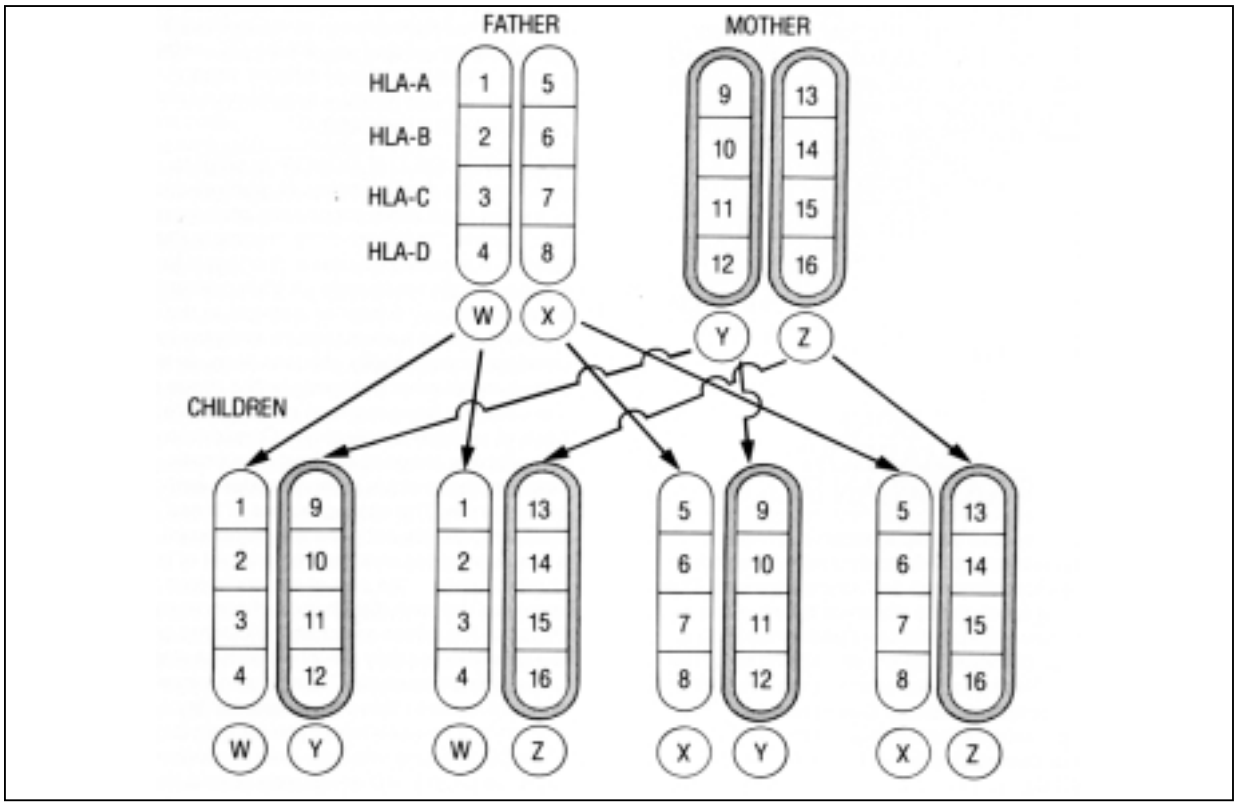

Because fewer than 25% of the patients have a sibling which is a "match" there has been a major effort to develop alternative methods for transplanting "unmatched" stem cells. One alternative is to try to find a suitable "matched" donor through one of the worldwide computer-based bone marrow or cord blood registries. Very precise typing methods are necessary, since histocompatibility antigens that look alike superficially may be different if precise DNA typing methods are used. This is not a problem within families, but is a major problem when looking for unrelated donors. No matter how well "matched" the unrelated donor is (called a Matched Unrelated Donor or MUD), he/she will never be as good a match as a sibling because of a number of minor antigens for which we can not type. These donors have been very useful, however, for patients without a sibling match.

Another alternative is to remove the mature T-lymphocytes from the bone marrow prior to infusing it into the patient. In this way, the infused marrow is less able to recognize the patient as foreign and the graft versus host reaction is markedly reduced and sometimes eliminated. Although the mature T-lymphocytes have been removed from the grafted marrow, T-lymphocytes of donor origin can still develop from the stem cells and therefore reconstitute T-lymphocyte immunity. The risk of graft versus host disease from these T-lymphocytes is markedly reduced because these cells develop from the immature precursor cells in the grafted marrow, and they have been "educated" during their maturation to not recognize the recipient (host) as foreign. These treated marrows are not grafted as easily as "matched" untreated marrow and occasionally more than one transplant has to be performed. The usual donor for this kind of transplant is a parent since they share one half of the transplantation antigens of their child (see the diagram in Figure 1).

THE PROCEDURE OF BONE MARROW TRANSPLANTATION: Bone marrow transplantation is accomplished by removing bone marrow from the pelvic bones. Bone marrow is removed by drawing the marrow up through a needle which is about 1/8 of an inch in diameter. Only two teaspoons are taken from each puncture site because, if more is taken, the sample is diluted with the blood which bathes the bone marrow space. Usually two teaspoons are taken for each 2 pounds of the patient's body weight. The procedure may be performed under general anesthesia or under spinal anesthesia. The discomfort after the procedure varies from donor to donor. Nearly everyone will require some type of pain control medication for 2 to 3 days, but most are able to return to full activity within a week.

After removal from the donor, the bone marrow is passed through a fine sieve to remove any small particles of bone and placed in a sterile plastic bag. It is given to the immunodeficient patient through a needle into a vein in the same manner as a blood transfusion is given.

RESULTS OF BONE MARROW TRANSPLANTATION: Bone marrow transplantation between HLA matched siblings has been successfully employed in the treatment of immunodeficiency since 1968. The first child (a patient with SCID) is still alive and doing well. This case suggests that, as best as can be determined, the graft is very long lasting and appears to be permanent. In the usual patient with immune deficiency, bone marrow trans-

plantation involving a "matched" marrow has minimal graft versus host disease and is associated with an overall success rate of as high as 90%. However, a great deal depends on the health of the patient at the time of the transplant. If the patient is in relatively good health and free of infection at the time of the transplantation, the outlook is good. The success rate for the T-depleted half-matched transplants is not quite as good, though in infants with SCID the overall survival is over 80%. The survival rate is lower in patients who have diseases such as Wiskott-Aldrich Syndrome or Chronic Granulomatous Disease who require chemotherapy before the transplant in order to allow engraftment of the new bone marrow. Here again, the initial health of the patient is extremely important, and the best survival is in children under the age of 5 who are relatively free of infections.

GAMMA INTERFERON

Phagocytic cells (neutrophils, monocytes, eosinophils) of patients with Chronic Granulomatous Disease of childhood (CGD) do not kill some types of bacteria and fungi (see chapter on Chronic Granulomatous Disease). An international study with gamma interferon has shown that CGD patients who are given gamma interferon three times weekly subcutaneously had approximately 70% fewer serious infections than did those patients not receiving gamma interferon. Also, when those patients taking gamma interferon have infection they require less time in the hospital. Benefit from gamma interferon is most evident in children under 10 years of age, but all age groups benefit.

Interferon is a substance that is found naturally in the body. It is called "interferon" because it was originally discovered to interfere with virus growth. Several different interferons have been identified and it has been shown that they exert numerous effects on the immune system. The interferons are named alpha, beta and gamma interferon. Gamma interferon is related to alpha and beta interferon for its antiviral activities, but in addition is a potent stimulus of phagocytic cells. Among the phagocytic cell activating properties of gamma interferon is stimulation of hydrogen peroxide production. Increased hydrogen peroxide production improves the bacterial killing by the phagocytic cells.

Gamma interferon is supplied in a singledose vial of 0.5 ml. The dose for each patient is determined by body surface area, which means that both height and weight are considered. For small children, the surface area is not a reliable method, so they are dosed by weight alone. The vials must be kept refrigerated, never frozen, and should not be shaken. There is no preservative in the gamma interferon preparation, so opened vials should be discarded after 12 hours at room temperature. Expired vials should not be used.

Gamma interferon is given as a subcutaneous injection three times a week (such as Monday, Wednesday, and Friday). The preferred sites for injection are the right and left thigh and arm. Administration is similar to giving insulin to diabetics. Used syringes should be disposed of in an approved needle waste box and the full box returned to the physician or local emergency room for proper incineration. Never discard needles and syringes in your household trash.

Common side effects of gamma interferon therapy include fever, muscle

aches, headaches, and occasionally chills. Taking the interferon at bedtime can minimize side effects. If headaches persist the next morning, the drug should be given earlier in the evening. If the severity of the side effects is unacceptable, it may be appropriate to reduce the dose. If no side effects are seen but fevers suddenly follow the gamma interferon dose, this should be reported to the physician. In some instances fevers following gamma interferon can be a sign of a subclinical (or hidden) infection. A few patients experience symptoms of depression from interferon gamma and if depression occurs, consult your physician. Patients with a history of seizures should not take gamma interferon.

PEG ADA

Deficiency of the enzyme adenosine deaminase (ADA) causes a rare, life threatening form of Severe Combined Immunodeficiency Disease (SCID) (see chapter on Severe Combined Immunodeficiency). About 1 in a million children are born with ADA deficiency.

The highest levels of ADA occur in cells of the immune system (lymphocytes). When ADA is missing, a substance called deoxyadenosine builds up and is toxic to the developing immune system, while other tissues and organs are resistant to deoxyadenosine. Most ADA deficient infants lack both T- and B-lymphocytes and are susceptible soon after birth to repeated, serious infections of the skin, respiratory and digestive tracts. In milder cases, the onset of serious illness may be delayed until 23 years of age. The complete deficiency results in Severe Combined Immunodeficiency Disease (SCID).

Although antibiotics and regular treatment with intravenous gamma globulin are helpful, SCID is fatal, usually by 2 years of age, if immune function is not restored. Like other forms of SCID, ADA deficiency can be cured by transplanting bone marrow from a donor with the same tissue type as the patient (usually a brother or sister), but in most cases, a "matched" donor is not available. There are three approaches to treating ADA deficient SCID patients who do not have a "matched" donor: 1) transplantation of "partially matched" or haploidentical marrow, 2) enzyme replacement, and 3) experimental gene therapy. The various methods of carrying out bone marrow transplantation, and some experimental approaches to gene therapy are discussed elsewhere in this chapter. This section will deal with enzyme replacement therapy.

The rapid elimination of purified enzymes by the body made enzyme replacement for ADA deficiency impractical until it was discovered that linking a polymer called polyethylene glycol, or PEG, to the enzyme could greatly prolong its effectiveness after injection. A clinical trial of PEG-ADA, using ADA purified from cows, was begun in April 1986 in a critically ill child who had failed to benefit from two haploidentical marrow transplants. Based on the results with this patient and others treated subsequently, PEG-ADA was approved for treatment of ADA deficiency by the US Food and Drug Administration in March 1990.

A teaspoon of PEG-ADA has as much ADA activity as a billion normal T-lymphocytes. Intramuscular injection of this amount or less of PEG-ADA once or twice a week maintains enough ADA activity in the bloodstream of patients to effectively eliminate the toxic effects of deoxyadenosine that cause the immune

deficiency. This gives the immune system a chance to recover over a period of several weeks to a few months. Continued weekly injections of PEG-ADA are then necessary to maintain clinical improvement.

Immune function improves in nearly all patients, but the degree varies, ranging from very little to nearly normal. However, clinical benefit is more uniform and is evident by 6 months of treatment even in the 20% of patients whose lymphocyte counts remain most depressed. Pneumonia, diarrhea and other serious infections present at the start of therapy resolve, and growth, which may be severely impaired initially, resumes. Over the longer term, treated children have responded well to ordinary childhood infections, allowing them to have normal contact with other children. Older patients are attending school. Thus far IVIG has been discontinued in about half the children receiving PEG-ADA. Those who have caught chicken pox and other viral infections, which can be fatal to untreated patients with SCID, have recovered uneventfully and developed long lasting, normal levels of antibody to the virus.

Aside from the discomfort of an intramuscular injection, PEG-ADA has had no side effects. Initially there was concern that, because a nonhuman source of ADA was being used, patients might develop antibodies that could neutralize the enzyme or cause allergic reactions. Antibodies to bovine ADA can be detected by sensitive tests in most patients, but there have been no allergic reactions and in only a few cases has the development of antibody against the ADA necessitated an increase in the dose of PEG-ADA.

Because ADA deficiency is so rare it will take much more time to establish the longterm benefit of PEG-ADA. However, in the ten years it has been in use, PEG-ADA has been proven to be lifesaving and effective in reversing the dire clinical outlook associated with SCID due to ADA deficiency. We anticipate that the children now receiving PEG-ADA will one day be candidates for stem cell gene therapy when that procedure is shown to be safe, reliable and effective.

GENE THERAPY

Because most of the primary immune deficiency diseases are caused by a defective gene, it would be logical to correct the defect by correcting the gene. Many of the genes that cause diseases of the immune system have been identified and most of the others may be within the next few years. Techniques are now available to “clone” or produce large quantities of normal genes and to insert them into cells that contain the defective gene. Fortunately, blood cells, such as cells of the immune system, are the easiest type of cells to use for gene insertion. The genes are inserted into viruses that normally invade cells, but the viruses have been modified so that they can no longer cause disease or clinical infections. These modified viruses containing normal genes are known as vectors. The vectors attach to cells and insert the normal gene into the cell. It then goes to the nucleus where it joins all of the other genes. The first gene to be transferred was the gene for ADA. It was possible to insert the gene into blood cells, but these cells only survived for a few months. Unfortunately, it was not possible to insert the gene into the stem cells, the cells that live in the bone marrow and

are the source of all of the cells in the marrow. It is necessary to get the gene into these stem cells to get a permanent "cure". None of the children who have had the ADA gene inserted into their stem cells have enough ADA activity to allow them to stop the PEG-ADA. However, new trials are underway that hold the promise of inserting the ADA gene into the stem cell.

Recently, five children with X-linked Severe Combined Immunodeficiency have undergone gene therapy with near complete restoration of both T- and B-lymphocyte function. This very exciting breakthrough proves that gene therapy can be successful.

Some diseases, such as ADA deficiency, should be relatively easy to correct once the technique for gene insertion is perfected. Other diseases may be more complex. Many of the genes in our body are under the control of other regulatory genes that produce one or more regulatory proteins. Since the new normal gene is not inserted into the correct place on the chromosome, it may not be properly regulated. Genes that require precise regulation may have to be inserted with their regulatory genes as part of the vector. Despite these problems, it is likely that one-day gene therapy will be the procedure of choice for the majority of immunodeficiency diseases.